industrial-premium CASTORS

Load Capacities up to 700kg

- Fully fabricated steel frames provide optimum strength and durability
- Swivel castors have a precision machined deep grooved, sealed ballrace
- Top plates conform to AS B282
- Large selection of wheel types to suit a wide range of operating environments, 100mm to 250mm diameter
- Wheels supplied with a roller bearing
- A greasable axle or grease nipple is fitted to extend the working life when maintained correctly
- Wheel brakes (suffix H) are available on most swivel castors
- Australian made
- 12 month warranty

Users include: Major Industry, Manufacturers, Workshops, Factories and Warehouses

This range utilises the same time-proven frames as the heavy industrial range, with precision machined integral swivel race, and is coupled with a more economical selection of roller bearing wheels providing capacities up to 700kg.

This provides an ideal compromise where the best industrial frame is required, and a lower cost wheel is required for the purpose.

Frames

Manufactured from heavy steel sections, frame components are robot welded to provide strength and durability even under adverse conditions. The rigid castor leg is formed to give extra sideways strength.

Other features include precision-machined deep grooved swivel races, sealed for life to minimise maintenance requirements.

Top plates are made to a widely adopted standard complying with Australian Standard AS B282, maximising compatibility and ease of replacement or upgrading in the future.

Most swivel castors are available with an over the wheel brake. The brake design allows for the high impact nylon pedal to be easily replaced if necessary.

Wheels

Sizes range from 100mm to 250mm with tyres ranging from polyurethane and rubber moulded onto cast iron centres, polyurethane with a polymer centre, cast iron, v-groove cast iron or nylon.

Wheels are supplied with a roller bearing, which is a popular low cost easy movement bearing. This bearing is widely used to reduce the manual effort to move heavy loads.

A greasable axle or grease nipple is fitted for maintenance purposes to extend the working life.

12 Month Warranty

This range carries our standard 12 month warranty against faulty workmanship and materials, and is backed by a service and parts network Australia wide.

R.J. Cox Engineering
(02) 9486-3006

www.coxengineering.com.au
info@coxengineering.com.au

industrial-premium CASTORS

WHEEL SPECIFICATIONS						CASTOR SPECIFICATIONS							
Dia 'A'	Width 'B'	Wheel Type	Wheel Model	Bearing	Capacity	Height 'C'	Swivel Model	Rigid Model	Swept Radius 'D'	Swept Radius K'	Plate Code	Product Code Swivel	Product Code Rigid
100	50	Black Rubber/Cast Iron	L84210	Roller	110	140	L559-8	L560-8	95	162	A	-	-
100	50	Cast Iron	L84510	Roller	310	140	L561-8	L562-8	95	162	A	-	-
100	50	Cast Iron V-Groove	L84610	Roller	360	140	L561V-8	L562V-8	95	162	A	-	-
100	50	Polyurethane/Cast Iron	L84410	Roller	280	140	L559PU-8	L560PU-8	95	162	A	01064377	01064581
100	50	Polyurethane/Polymer	L84710	Roller	250	140	L559PPU-8	L560PPU-8	95	162	A	-	-
125	50	Black Rubber/Cast Iron	L85210	Roller	180	165	L567-8	L568-8	110	174	A	-	-
125	50	Cast Iron	L85510	Roller	450	165	L569-8	L570-8	110	174	A	-	-
125	50	Cast Iron V-Groove	L85610	Roller	360	165	L569V-8	L570V-8	110	174	A	-	-
125	50	Polyurethane/Cast Iron	L85410	Roller	360	165	L567PU-8	L568PU-8	110	174	A	01057509	01057866
125	50	Polyurethane/Polymer	L85710	Roller	340	165	L567PPU-8	L568PPU-8	110	174	A	-	-
150	50	Black Rubber/Cast Iron	L86210	Roller	200	190	L534-8	L535-8	125	183	A	-	-
150	50	Cast Iron	L86510	Roller	540	190	L577-8	L578-8	125	183	A	-	-
150	50	Cast Iron V-Groove	L86610	Roller	450	190	L577V-8	L578V-8	125	183	A	-	-
150	50	Polyurethane/Cast Iron	L86410	Roller	470	190	L534PU-8	L535PU-8	125	183	A	01063663	01063901
150	50	Polyurethane/Polymer	L86710	Roller	400	190	L534PPU-8	L535PPU-8	125	183	A	-	-
150	40	White Nylon	L86010	Roller	450	190	L573-8	L574-8	125	183	A	-	-
200	50	Black Rubber/Cast Iron	L88210	Roller	220	250	L536-8	L537-8	155	200	A	-	-
200	50	Cast Iron	L88510	Roller	600	250	L584-8	L585-8	155	200	A	-	-
200	50	Cast Iron V-Groove	L88610	Roller	540	250	L584V-8	L585V-8	155	200	A	-	-
200	50	Polyurethane/Cast Iron	L88410	Roller	700	250	L536PU-8	L537PU-8	155	200	A	-	-
200	50	Polyurethane/Polymer	L88710	Roller	400	250	L536PPU-8	L537PPU-8	155	200	A	-	-
200	50	White Nylon	L88010	Roller	500	250	L588-8	L589-8	155	200	A	01066587	01066111
250	64	Polyurethane/Cast Iron	L810410	Roller	700	300	L538PU-8	L539PU-8	185	N/A	A	01066791	01068746

Options

Wheel brake, use suffix H after the swivel model number - i.e. L536PPU-8H (not available on Cast Iron or V-Groove wheels)

TECHNICAL SPECIFICATIONS

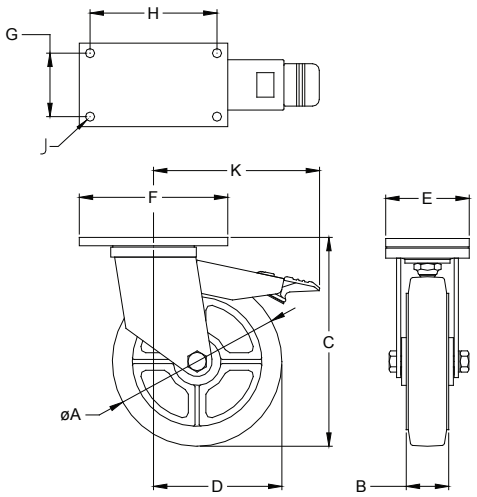

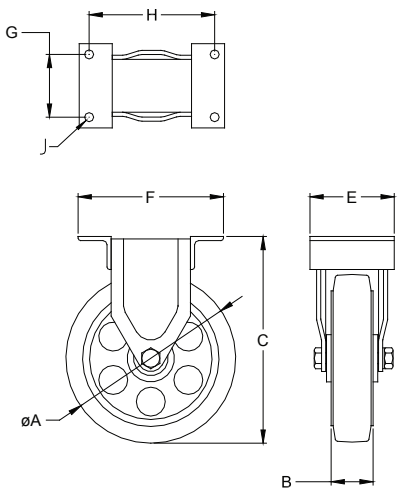

Top Plate Sizes and Bolt Hole Dimensions

All dimensions in millimetres

Plate Code	E x F	G x H	J
A	100 x 178	76 x 152	10

R.J. Cox Engineering
(02) 9486-3006

www.coxengineering.com.au
info@coxengineering.com.au

LEMCOL®

Models and specifications are subject to change without notice, all dimensions are nominal

© Lemcol Materials Handling 10/2009